(3) Labyrinth Seals

This employs the labyrinth shaped seals with narrow gaps to make the passage to outside comparatively longer to increase the sealing effect.

When the gaps are filled with grease, sealing is more effective. And, if the environment is dirty, it is recommended to press grease from the inside into the sealing gaps in shorter time intervals.

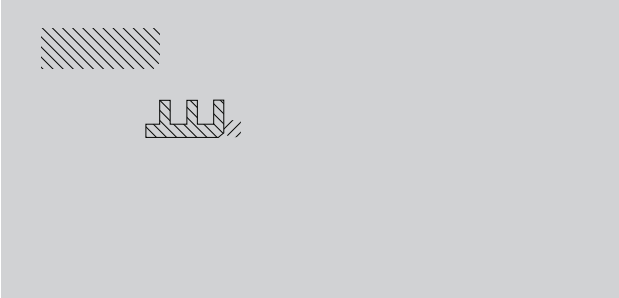

(4) Lamellar Rings

Lamellar rings made of steel spring disks require some mounting space to both inside and outside of the rings. Lamellar rings can prevent the oil leakage and block out the foreign materials, and they can also serve as a secondary seal when water is often splashed outside bearings.

11-2-2 Contact Seals

Contact seals, made of elastic materials, such as synthetic rubber, synthetic resin, or felt, etc., directly rub against the shaft to produce high sealing effect, although there exists a danger of heat generation and increase of rotating torque, due to friction with contact area.

(1) Oil Seals

This is the most commonly used method, and their various sizes and shapes are standardized(KS B 2804).

These seals are usually used, where threat of foreign materials, such as dust and water, etc., being penetrated into is high. And, the eccentricity of shaft can be also corrected, up to a certain degree, by seal lip of synthetic rubber or coil spring in the oil seal.

Because wear and hardening of oil seals varies depending on the circumferential velocities and temperatures of the applied parts, it is important to select a seal of appropriate material. To assist the readers to select the appropriate seals, Table 11-4 shows the permissible speeds and operating temperature ranges for each type of materials.

If the circumferential velocity or the inside pressure is high, it is necessary to smoothen the contact surface of the shaft, and also to keep the eccentricity of the shaft less than 0.02 0.05mm.

Also, the shaft surface should have the hardness above H_{RC} 40, which can be obtained by applying heat-treatment or plating with hard chrome. The standard values of contact surface roughness required in accordance with circumferential speeds of the shaft are shown in the Table 11-5.

(2) Felt Rings

Felt rings are simple sealing elements which prove to be particularly successful with grease lubrication. However, they can not provide perfect protection against oil penetration or leaking, so they are usually used, in case of grease lubrication, just for prevention of dust or foreign materials from being entered, and they are generally soaked in oil before mounting for considerably better sealing effect.

If environmental conditions are adverse, two felt rings can be arranged side by side.

(3) V-Ring

V-ring is a lip seal with axial effect. During mounting, this one-piece rubber ring is pushed onto the shaft under tension until its lip contacts the housing wall. The sealing lip also acts as a2aga28( )28(a)9( )-18(t)28

12. Lubrication

Lubrication can be defined as the application of some materials between two objects moving relative to each other to allow smooth operation as much as necessary.

Either oil or grease is used for rolling bearings to prevent noise, wear and tear, and heat from being generated from their rolling and sliding movements, and in some special cases, solid lubricants are occasionally used.

12-3 Grease Lubrication

12-3-1 Lubricating Grease

Grease can be defined as the lubricant of solid or semi-solid state that contains the thickener, and some greases contain various special ingredients. Because various kinds of greases have their own distinct characteristics, and sometimes even the same kind of greases produce quite different performance results, one has to be careful when selecting the greases.

lubrications of extremely high or low temperatures, or wide temperature ranges, and fast speed and high precision. Compound base oils of mainly esther, poly-㆓-olefine, or silicon series are generally used, but the use of fluorine compound oils are increasing nowadays.

(2) Thickener

Thickener is one of the most important elements in deciding the properties of the grease, and the thickness of grease depends on how much thickener is mixed in the grease.

There are mainly three kinds of thickeners, namely, metal soap, non-organic non-soap, and organic non-soap, but the metal soap thickeners are mostly used, and the non-organic non-soap thickeners are generally used only for the special cases, such as operationin in high temperature.

Generally speaking, the grease with high dropping point can be used in high temperatures, and the water-resistance of grease depends on that of thickener. Also for the bearings that come in contact with water or are operated under the high humidity level, the Na soap grease or the grease that contains Na soap can not be used, because they deteriorate quickly when in contact with the water or moisture.

(3) Additives

Various kinds of additives are used to enhance the grease performance and to meet the customers demands for different functions. These additives enhance the physical or chemical properties of grease, and/or minimize the wear, corrosion, or rust to the lubricated metals.

There are various kinds of additives used for prevention of oxidization, wear and tear, or rust. There are also the EP additives. The appropriate grease containing right kind of additives to the applied location has to be used.

(4) Worked Penetration

Worked penetration is used to represent the hardness of grease, and it is shown as the penetrated depth(1/10mm) to grease by the pendulum of specified weight, and the greater the value is, the softer the grease is.

12-3-2 Polymer Grease

Polymer grease of hardened lubricant mixed with polyamid is generally used, and it allows to supply the grease for a long period.

It is widely used for the bearings to which the strong centrifugal force is applied, such as the ones in wire stranding machines or compressors, or to which leaking and pollution to the environment or insufficient lubrication is easy to happen.

12-3-3 Injection of Grease

(1) Injection Amount of Grease

The grease usually occupies 30% of bearing space, initially, and it is distributed evenly during the

Table 12-3 shows the greases of different worked penetrations and their usage.

NLGI Worked Penetration No.	KS Worked Penetrations of Mixtures	State	Usage
0	355...385	Semi-gel or soft	Centralized lubrication system
1	310...340	Soft	Centralized lubrication system
2	265...295	Ordinary	For general use, sealed ball bearings
3	220...250	Ordinary or rather hard	For general use, high temperature use
4	175...205	Rather hard	For special purposes

* NLGI : National Lubricating Grease Institute



initial few hours of operation. And then, it is operated with just 30 50% of initial friction of the bearing.

The bearings purchased without grease inside, have to be filled with grease by the users themselves, and following cautions have to be taken while filling.

(a) The space inside the bearing has to be filled completely, but, in case of high speed rotation($n \quad dm > 500{,}000\ min^{-1} \quad mm$), only 20 25% of free space has to be filled.
(b) It is recommended to fill only up to 60% of housing space adjacent to the bearing, so as to leave sufficient room for the dispelled grease from the bearing.
(c) In case of low speed rotation($n \quad dm > 50{,}000\ min^{-1} \quad mm$), whole space of bearing and housing can be filled with grease.
(d) For the bearings rotating at a very high speed, it is necessary to test-run the bearings in advance, so as to distribute the grease evenly.

(2) Life Span of Grease

The life span of grease is a period from the start of bearing operation to bearing failure due to its insufficient lubricating action.

The life span of a grease with 10% of bearing failure possibility is denoted by F_{10}. The F_{10} Life Span Curves can be obtained by laboratory experiments set up close to the real operation situations. In most cases, because users do not know the values of F_{10}, the lubrication interval, t_f, is recommended as the minimum value for the life span of the standard grease. Refilling inte-rval is set considerably shorter than the lubrication interval, so as to provide stability. Reliability can be increased sufficiently even for the greases barely meeting the minimum requirements, if lubricated in accordance with the lubrication interval curves in the Fig. 12-2.

The lubrication intervals are determined by the values of $k_f \quad n \quad d_m$, which can be obtained from the speed formula related to bearings, and the different values of

Table 12-4 Grease Property and Application Table-Grease.

Grease	Color	Thickener	Base Oil Viscosity (40℃) mm²/s	Worked Penetration NLGI	Operating Temperature ℃	Limit Rotating Ratio (%)	Main Properties	Main Applications
G6	**Light Brown**	**Lithium soap**	ISO VG 90	2	-15…+90	60	**Medium speed Heavy load**	**General industrial Machinery**
G9	**Brown**	**Lithium soap**	ISO VG 20	2	-55…+130	100	**Ultra high speed**	**Machining tools spinning machine, spindle bearing, small precision bearing**
G 2	**White**	**Lithium soap**	ISO VG 38	2/3	-30…+200	60	**Medium speed**	OA **equipment, electric motor and high temperature use high temperature equipment bearing**
G 4	**Green**	**Polyurea**	ISO VG 110	2	-30…+175	100	**Ultra high speed**	**Coupling, electric equipment(elecric motor, generator)**

12-4 Oil Lubrication

12-4-1 Lubricants

Lubricants can be largely divided into two groups, namely mineral oil base lubricants and synthetic lubricants.

When selecting a lubricant, its viscosity is one of the most important factors to be considered. If its viscosity is too low at its operating temperature, oil film can t be sufficiently formed, causing abrasion and/or burning-and-sticking. And, if it s too high, its viscosity resistance becomes higher, causing temperature/friction rise and subsequent abnormal power loss.

In general, lubricants with low viscosity are used when it runs at high speed and low load, and ones with high viscosity when at low speed and high load.

The minimum viscosity at its operating temperature during normal operation is shown at the Table 12-5 shown below, and it should not go under these minimum values.

Lubricants should be selected in accordance with viscosity specified by ISO, and its viscosity index can be used conveniently for references. Although it depends on viscosity indices, its viscosity gets reduced by half whenever the temperature of lubricant increases by 10 ℃.

Typical lubricants to be selected depending on bearing s operating condition are shown on Table 12-6.

Table 12-5 Bearing types and minmum dynamic viscosity required for lubricants

Bearing Type	Dyminic viscosity during operation(cSt)
Ball Bearing, Cylindrical roller bearing, Needle roller bearing	over 13
Tapered roller bearing, Cylindrical roller bearing Thrust needle roller bearing	over 20
Thrust spherical roller bearing	over 32

Table 12-6 Selection of Lubricants

Operating temperature ℃	Revolving Speed	ISO Viscosity Class (VG) of Lubricant Light Load or Nomal Load	High Load Impact Load
-30…0	Up to allowable speed	15, 22, 32	46
0…50	up to one half of allowable speed	32, 46, 68	68, 100
	Up to allowable speed	15, 22, 32	32, 46
	Same or above allowable speed	10, 15, 22	-
50…80	up to one half of allowable speed	100, 150, 200	220, 320
	Up to allowable speed	46, 68, 100	100, 150
	Same or above allowable speed	32, 46, 68	-
80…100	up to one half of allowable speed	320, 460	460, 680
	Up to allowable speed	150, 220	220, 320
	Same or above allowable speed	68	-

Remarks: 1) In case of oil sump or circulation lubrication
2) Contact KBC if operating conditions are beyond the values of this Table.

12-4-2 Oil Lubrication Methods

(1) Oil Sump Lubrication

It is the most generally used lubrication method, especially for low or medium speed operations.

Oil surface should be, in principle, placed at the center of lowest rolling element, and it is better to be able to confirm the location of oil surface by using the oil gauge(Fig. 12-3).

(2) Drip Feed Lubrication

This method is widely used for small bearings that operate at a relatively high spe8p Lubricat and oil supply is controlled by adjusting the volume of oil drip(Fig. 12-4).

(3) Throwaway Lubrication

This is a method that utilizes gear or circulation ring to supply oil to bearings. It is widely used for automotive transmissions or gears(Fig. 12-5).

(4) Circulation Lubrication

It is widely used when it is necessary to cool the

76 Td [(T)8(l)88(c)29(e)8riaat oil( )-68(c)2tea Td [(76 Ta(n

(5) Jet Lubrication

Jet lubrication is widely used for high speed revolution bearings(for n dm 1,000,000), and oil is jet-sprayed through one or several nozzles under constant pressure into the inside of a bearing.

In general, jet stream speed should be faster than 1/5 of circumferential speed of inner ring outer surface because air wall formed by surrounding air

irtczdingrbentiFtnttg6.661(l) 0 57-13.79 T6) Spray Lubricationad (o)26(l)26bearution ingd [(,)26( )-111(,)26(m-11

13. Bearing Material

Rolling bearing is made of ring and rolling e

KBC Unit Bearings

Standards ◦ Basic Designs ◦ Plummer Block Housing ◦ Flanged Housing

Unit bearings are preferably used for applications calling for simplicity of design and assembly.

KBC programme includes unit bearings and the suitable plummer block housings and flanged housings.

Unit bearings are used almost exclusively as locating bearings. Therefore, they are particularly suitable for supporting short shafts and for applications where only minor thermal expansions are likely to occur. Minor expansions of the shaft are compensated for by the axial clearance of the bearings.

Standards

Unit ball bearing	KS B 2049
Unit ball bearing housing	KS B 2050

Basic Designs

Unit bearings of UC and UB Series can be fitted into different housings.

They are fastened on the shaft by means of two threaded pins(See tightening torque and wrench openings indicated in the Table below.). The flinger rings protect UC Series bearings from coarse contaminants.

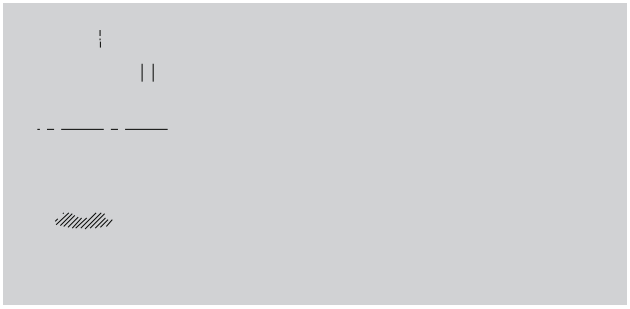

Lubrication

KBC unit bearings require no maintenance, and the standard grease filling will generally last for the whole bearing life. It is possible to relubricate through lubrication nipples.

The bearings have one lubricating hole in the outer ring.

Alignment

KBC bearings can compensate for static misalignments of up to 5° out of the center position. The angular misalignment of bearings which are relubricated must not exceed 2° as otherwise the lubricating hole in the outer ring will be covered and no longer accessible.

Tolerances

Basically, KBC unit bearings are machined to the normal tolerance class of radial bearings as shown on Page 66. However, since the bearing bore is loosely fitted to the shaft, and fastened by means of set screws, the tolerance range becomes comparatively bigger. The following Table shows the tolerances of bore diameters.

Bearing Clearance

KBC unit bearings have the radial clearances of deep groove ball bearings as shown on Page 92. Unit bearings with a higher precision can be supplied on request.

Operating Temperature

KBC unit bearings are filled with a specially tested quality grease. The maximum operating temperature is 100℃ and the lower temperature limit is -30℃.

Speed Suitability

The speeds attainable with KBC unit bearings are determined primarily by the bearing seat on the shaft. The speeds reached with relatively rough shafts and loose fits are low. Higher speeds are reached KBC aithter figs and lore aecuratble eache

Equivalent Dynamic Load

$$P \quad X \cdot F_r + Y \cdot F_a$$

The contact angles of deep groove ball bearings increase as their axial loads increase. Therefore, factors, X and Y, depend on F_a/C_o, as shown below.

▼ Radial and Axial Factors of Unit Bearings

F_a/C_0	e	$F_a/F_r \leqq e$		$F_a/F_r > e$	
		X	Y	X	Y
0.014	0.19	1	0	0.56	2.30
0.028	0.22	1	0	0.56	1.99
0.056	0.26	1	0	0.56	1.71
0.084	0.28	1	0	0.56	1.55
0.11	0.30	1	0	0.56	1.45
0.17	0.34	1	0	0.56	1.31
0.28	0.38	1	0	0.56	1.15
0.42	0.42	1	0	0.56	1.04
0.56	0.44	1	0	0.56	1.00

Equivalent Static Load

$$P_0 \quad F_r \qquad : \textbf{for} \ \frac{F_a}{F_r} \leqq 0.8$$

$$P_0 \quad 0.6 \cdot F_r + 0.5 \cdot F_a \qquad : \textbf{for} \ \frac{F_a}{F_r} > 0.8$$

20	20	47	16	31	12 7	6x0 75	3	127	38	15	33 3	65	95	86	12
	20	47	14	25	7	6x0 75	3	127	38	15	33 3	65	95	86	12
25	25	52	17	34	14 3	6x0 75	3	140	38	16	36 5	71	105	95	14
	25	52	15	27	7 5	6x0 75	3	140	38	16	36 5	71	105	95	14
25.4	25 4	52	17	34	14 3	6x0 75	3	140	38	16	36 5	71	105	95	14
30	30	62	19	38 1	15 9	6x0 75	3	165	48	18	42 9	84	121	108	14
35	35	72	20	42 9	17 5	8x1	4	167	48	19	47 6	94	127	117	16
40	40	80	21	49 2	19	8x1	4	184	54	19	49 2	100	137	130	16
45	45	85	22	49 2	19	8x1	4	190	54	20	54	108	146	137	18
50	50	90	23	51 6	19	10x1 25	5	206	60	22	57 2	114	159	143	18
55	55	100	24	55 6	22 2	10x1 25	5	219	60	22	63 5	126	171	162	20
60	60	110	27	65 1	25 4	10x1 25	5	241	70	25	69 8	138	184	175	20
65	65	120	28	65 1	25 4	10x1 25	5	265	70	27	76 2	150	203	187	20

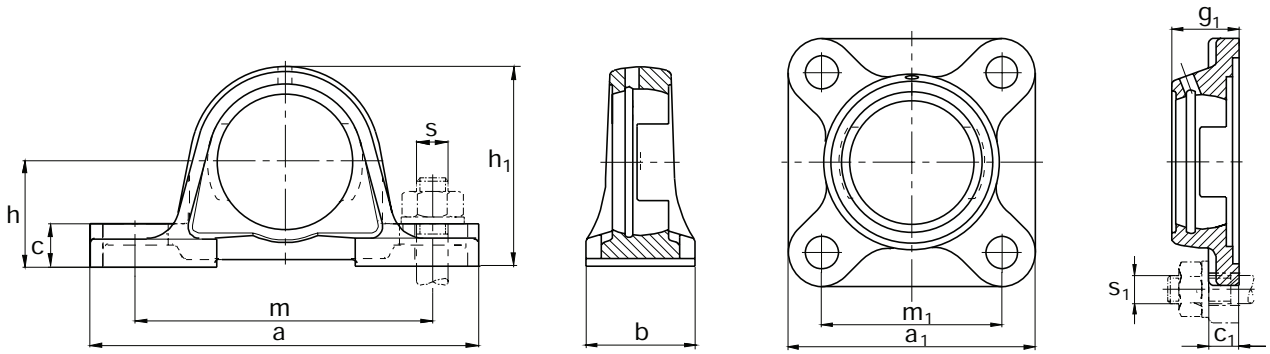

P2 F2

'BTUFOJOH #PMU -PBE 3BUJOH$PEF 8FJHIU H—

F)PVTJOH g1	P)PVTJOH m1	s	s1	C	C0	4UBUJD		#FBSJOH	)PVTJOH	)PVTJOH	UCH	UCH	UCF
												6OJU	6OJU
mm				kgf		kgf		KBC	KBC	KBC	kg		
25 5	64	10	10	12800	1310	6650	678	UC204	P204	F204	0 16	0 68	0 62
25 5	64	10	10	12800	1310	6650	678	UB204	P204	F204	0 15	0 67	0 61
27	70	10	10	14000	1430	6650	678	UC205	P205	F205	0 19	0 82	0 83
27	70	10	10	14000	1430	7900	806	UB205	P205	F205	0 17	0 8	0 81
27	70	10	10	14000	1430	7900	806	UC205-16	P205	F205	0 18	0 81	0 82
31	83	14	10	19400	1980	11300	1150	UC206	P206	F206	0 31	1 36	1 14
34	92	14	12	25700	2620	15400	1570	UC207	P207	F207	0 48	1 73	1 47
36	102	14	14	29100	2970	17800	1820	UC208	P208	F208	0 62	2 1	2
38	105	14	14	32500	3310	20400	2080	UC209	P209	F209	0 67	2 3	2 4
40	111	16	14	35000	3570	23200	2370	UC210	P210	F210	0 78	2 7	2 6
43	130	16	16	43500	4440	29200	2980	UC211	P211	F211	1 03	3 4	3 6
48	143	16	16	52500	5350	36000	3670	UC212	P212	F212	1 45	4 8	4 8
50	149	20	16	57000	5810	38500	3930	UC213	P213	F213	1 71	5 7	5 8

Bearings and housings of other designs can be supplied on request.
Machining dimensions may change without notice.

KBC Thrust Ball Bearings

Single Direction ◦ Basic Designs ◦ Tolerances ◦ Cages ◦ Axial Loads ◦ Abutment Dimensions ◦ Prefixes ◦ Suffixes Basic Designs

Basic Designs

Separable thrust ball bearing consists of fixed ring, revolving ring, rolling element, and cage. These bearings can transmit only axial loads, and they are mainly used for low and medium speeds. King-pin thrust ball bearings are non-separable bearings, and they are manufactured to have no cages so as to accommodate as many balls as possible, and their steel design holds the fixed ring and revolving ring together permanently, and some of them are attached, depending on operating conditions, with sealing device, such as rubber seal or O-ring.

Tolerances

Thrust ball bearings as basic designs are machined to normal tolerances. Bearings with higher precisions(Suffixes P6 or P5) can be supplied on request.

Precision: Tolerances of Thrust Ball Bearings on Page 80.

Cages

Thrust ball bearings of basic designs are equipped with the pressed steel cages(No assigned suffix). Some thrust ball bearings(Suffix V) are manufactured to have no cages so as to acco-mmodate as many balls as possible.

Minimum Axial Load, High Speeds

At high speeds, bearing kinematics is affected by the inertia forces of the balls, if the axial load does not reach a certain minimum value.

If the external axial load is too low, the bearings must be preloaded, e.g. by means of springs.

Equivalent Dynamic Load

Thrust ball bearings can accommodate only axial loads.

P F_a

Equivalent Static Load

Thrust ball bearings can accommodate only axial loads.

P_0 F_a

Abutment Dimensions

The bearing washers should closely fit the shaft or housing shoulder, they must not be allowed to foul the shoulder fillet radius. Consequently, the maximum fillet radius r_g of the mating part must be smaller than the minimum corner rmin of the thrust ball bearing.

The shoulder of the mating parts must be so high that even with maximum bearing corner, there is an adequate abutment surface. The maximum fillet radius R, the minimum diameters of abutment shoulders of shaft, D_s, and the maximum diameters of abutment shoulders of housing, d_h, are shown on the Dimension Tables.

Prefixes

S Bearings with steel cover

Suffixes

TAG King-pin thrust ball bearing
V Bearing with no cage

17	17	30	9	18	30	0 3	22	25	0 3
20	20	35	10	21	35	0 3	26	29	0 3
28	28	–	15 8	28 5	51 6	–	–	–	
30	30	47	11	32	47	0 6	37	40	0 6
	30	–	17	30 5	51 6	–	–	–	
35	35	52	12	37	52	0 6	42	45	0 6
35.1	35 1	–	18	35 8	62 8	–	–	–	
40	40	60	13	42	60	0 6	48	52	0 6
	40	–	13 8	41	61 6	–	–	–	
50	50	70	14	52	70	0 6	58	62	0 6

;‡e2C]/ ^½²s1~6 eOk"÷ SHENYANG TOTAL BEARING CO., LTD.
Tel: 024 22945833 22923833 24853899 Fax: 024 88729249
Mobile: 13940483518 15640413155 ð .- à o
Web: https://www.rstbearing.com.cn



Water pump bearings are originally known to be the solid shaft bearing, but, because they are mainly used for automotive water pumps, they are usually called as water pump bearings as a matter of convenience. In general, they have a structure unitized with double row bearing, and also with unitized bearing inner ring and shaft. Therefore their structure allows them to be comparatively smaller and lighter than others.

When a water pump bearing is mounted, impeller for supplying cooling water is attached on one end of the shaft, and a driving pulley on the other end.

Standards

In case of water pump bearings, because they are designed and machined to meet the spe-



Tolerances

In case of water pump bearings, because they are designed and machined to meet the specifications and conditions required for automotive water pumps, all tolerances are basically set to comply with customers srequirements.

One example of the tolerances for KBC water pump bearings is shown below for reference only, and they can be changed on customers srequirements and different precision classes. Therefore, it is necessary to contact and consult KBC before placing an order.

Cages

Cages of KBC water pump bearings are generally made from glass-fiber reinforced polyamide 66.

These cages can be used at operating temperatures of up to 120 • over extended periods. When required to use KBC standard water pump bearings under higher operating temperatures, please contact KBC in advance.

Seals

Seals of water pump bearings have the structures as shown below, and they are classified depending on the number and shape of seal lips, 2-LIP or 4-LIP.

Bearing Clearances

Radial clearances of KBC standard water pump bearings are shown below.

The bearings with different clearances can be supplied on request.

Tight-Fits of Housing

Bearing housing has to be properly tight-fitted to ma

KBC Water Pump Bearings

Codes

© Recommended Housing Tight-fit Conditions for KBC Water Pump Bearings

Outer Diameter of Outer Ring [mm]	Housing Bore	
	Cast Iron Housing	Aluminum Alloy Housing
30 35	R6	U6
38.1 42	R7	U7

The roundness of housing bore should be within a half of the diameter tolerance.

The taper of tapered face should not exceed a taper ratio of 0.0005.

When a housing made of different materials is to be applied, please contact KBC in advance.

© Codes for Water Pump Bearings

Example: RCHL - RW 30 62 01 - LB6 F4L G43

Material Code

RCHL	Heat-treated carburized steel inner ring for long life

Type Code

RW	Ball-Roller Type
BW	Ball-Ball Type

Outer Diameter of Outer Ring Code

30	30mm
35	35mm
38	38 1mm
42	42mm

œDecimals are rounded down.

Auxiliary Code

Seal	Flinger	Grease
L	F4L	G1
LB6		G2
Q		h
		h
		G101

Development Consequence Cod F

Outer Diameter of Inner Ring Code

62	0.6267"	15.918mm
70	0.7087"	18mm
74	0.7465"	18.961mm
86	0.8661"	22mm

œAfter converting inner ring outer diameter to inch dimension, it is rounded down to two decimals

KBC Water Pump Bearings

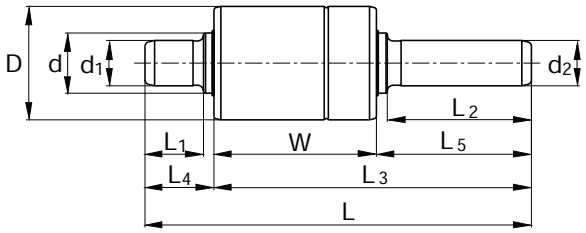

BW RW

)PVTJOH %JNFOTJPOT

	D	W	L	d	d_1	d_2	L_1	L_2	L_3	L_4	L_5
	mm										
30	30	23	79 8	15 918	15 918	12		38 3	64 3	15 5	41 3
	30	27	81 75	15 918	15 918	12 038		34 9	64 51	17 24	37 51
	30	30	83 5	15 918	15 918	12		34 5	67	16 5	37
	30	36	87 5	15 918	15 918	12		34 25	74	13 5	38
	30	38 894	68 39	15 918	15 918	15 918			43 394	24 996	4 5
	30	38 894	92 5	15 918	12	12	14	34 5	76	16 5	37 106
	30	38 894	103	15 918	15 918	12		43	86 5	16 5	47 606
	30	38 894	109 65	15 918	12	12	14 2	51 65	93 15	16 5	54 256
35	35	36	90 2	18	18	12 038		36 1	74 7	15 5	38 7
	35	38 894	92 5	18	15 918	12	14	34 5	76	16 5	37 106
	35	38 894	95	18	12	12	15	36	77 5	17 5	38 606
	35	38 894	100 4	18	15 918	12	14	42 4	83 9	16 5	45 006
	35	38 894	103 2	18	15 918	12	24 9	35 3	76 8	26 4	37 906
38.1	38 1	53 975	80 6	18 961	18 961	18 961		3	56 975	23 625	3
42	42	46	110 5	22	19	12	22 6	39	86 9	23 6	40 9
	42	46	142	22	22	16		49	101	41	55

[1])It is of just one ball row.

- P B E¸ CpA d7 pf k [illegible] 673.7 06.76 1 -10206 1040)

;‡ e2C]/ ^½s1~6 eOk "÷ SHENYANGTOTALBEARINGCO.,LTD.
Tel: 024 22945833 22923833 24853899 Fax 024 88729249
Mobile: 13940483518 15640413155 .- à o
Web: https:// www.rstbearing.com.cn



;‡ e2C]/ ^½s1~6 eOk "÷ SHENYANG TOTAL BEARING CO., LTD.
Tel: 024 22945833 22923833 24853899 Fax 024 88729249



Because KBC ceramic bearings are made of fine ceramic, which has excellent properties of corrosion-proof, heat-resistance, magnetism-proof, and insulation, they can be used where steel bearing can s be used for various reasons, providing excellent performances. Also, they have excellent lubrication and vacuum-resistance properties, which make them an excellent choice for clean room equipments and high-vacuum room equipments. And they are not affected by electromagnetism at all.

Characteristics of Ceramic Materials

Ceramic for KBC ceramic bearings is made from high purity nitro-silicon by means of high temperature static water pressure pressing. This material has low density and high tensile strength, and their excellent performances have been proven over and over again.

Comparisons with steel bearings are shown below.

Basic Designs

KBC ceramic bearings can be largely divided into 3 types, depending on their uses.

In case of bearings for high temperature use and corrosion-proof property, ceramic inner/outer rings and rolling elements are used, but with steel cage(STS304) for high temperature use, and with fluorine resin(PTFE) cage for corrosion proof property. The bearings for high temperature use can be used at operating tem-peratures of up to 500 • over extended periods.

By utilizing its light weight, ceramic is also used to make rolling elements for high speed bearings, which reduce centrifugal forces of revolving bearings drastically. And cages are usually made from glass-fiber reinforced polyamide 66 or from penol resin base with fabric layers.

KBC also supplies insulation bearings made of ceramic on outer ring surface and width surface of bearings.

Ceramic materials and cages of these ceramic bearings can be altered to suit their operating conditions, and KBC provides customer services to





KBC vacuum bearings are coated with solid lubricant in vacuum, and they can be used for bearings required to be used in a vacuum environment, where ordinary bearings with ordinary lubricants can not be used. All the parts including inner/outer rings are made of stainless steel.

All of inner/outer rings, balls, and retainers of KBC vacuum bearings are coated with solid lubricant, and they provide excellent lubrication and durability in a vacuum operational environment.

KBC vacuum bearings are custom-made and supplied on request.

Material Characteristics

Both rings and rolling elements are made of martensite stainless steel (STS440C).

The martensite steels have the highest hardness values even among all kinds of stainless steels, and they also allow minw alm26(o)26(wu26(n)26(t)26(s)-111(o)62(f)62( )-111(e)66(lm26(oi26(s)26(os26(oi26(

Appendix
1. Conversion Table for International System of Units(SI Units)

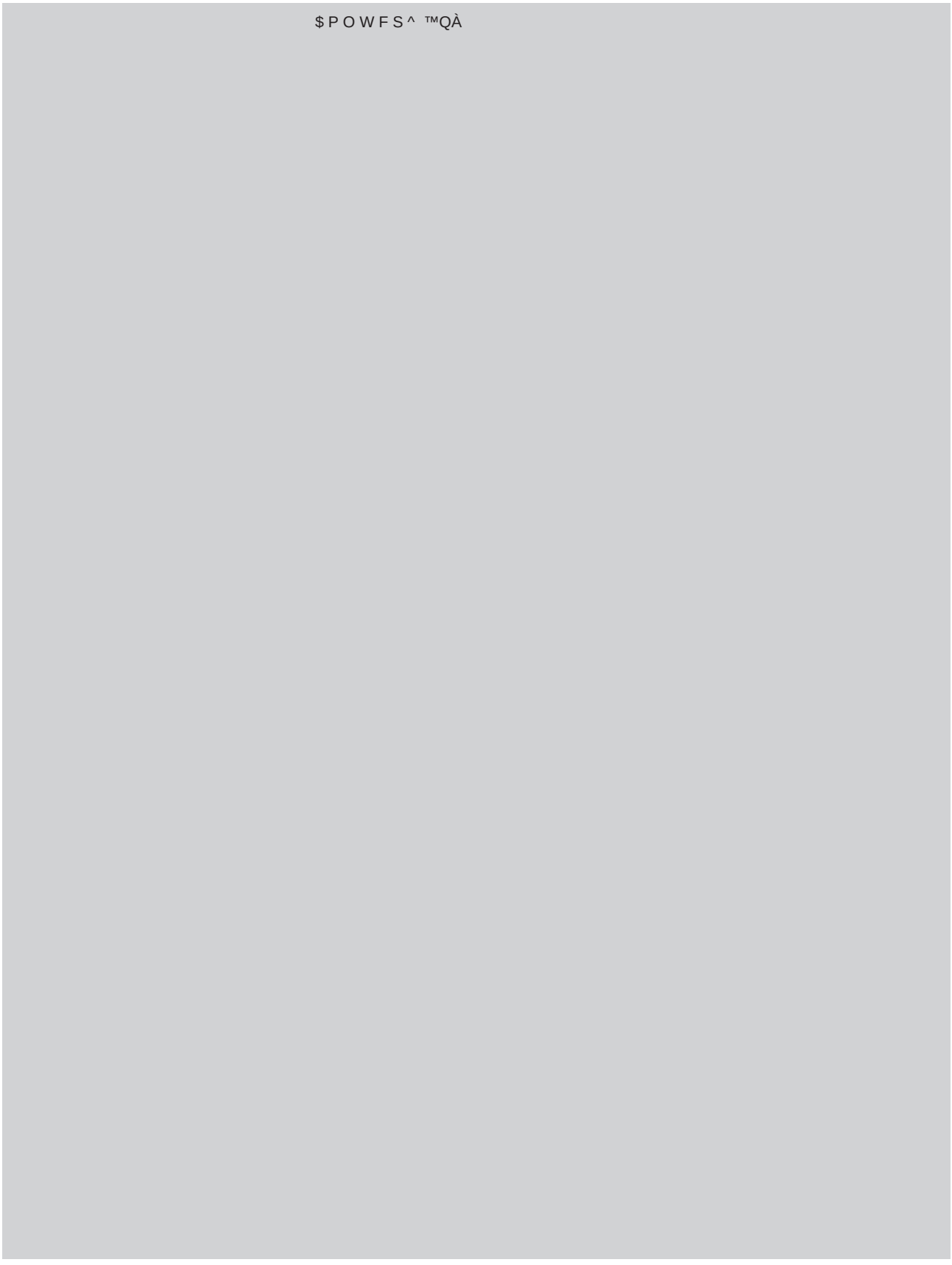

2. Comparison Table for SI CGS and Engineering Units

4ZTUFN	-FOHUI	.BTT	55FJNQFSB'UVSF	MFSBUJPO'PSDF	4USFTT	1SFTTVSF	8PSL	1
SI	m	kg	s	K	m/s^2	N	Pa	Pa	J	W
CGS 4ZTUFN	cm	g	s	℃	Gal	dyn	dyn/cm^2	dyn/cm^2	erg	erg/s
&OHJOFFSJOH	m	kgf·s^2/m	s	℃	m/s^2	kgf	kgf/m^2	kgf/m^2	kgf·m	kgf·m/s

3. Codes for Multiples of 10 for SI Units

5. Conversion Table for °C - °F

0 °C = 32 °F

0 °F = -17.8 °C

°C		°F	°C		°F	°C		°F	°C		°F
–	±100	–148 0	0 0	32	89 6	21 7	71	159 8	43 3	110	230
–62 2	±80	–112 0	0 6	33	91 4	22 2	72	161 6	46 1	115	239
–51 1	±60	–76 0	1 1	34	93 2	22 8	73	163 4	48 9	120	248
–40 0	±40	–40 0	1 7	35	95 0	23 3	74	165 2	51 7	125	257
–34 4	±30	–22 0	2 2	36	96 8	23 9	75	167 0	54 4	130	266
–28 9	±20	–4 0	2 8	37	98 6	24 4	76	168 8	57 2	135	275
–23 3	±10	14 0	3 3	38	100 4	25 0	77	170 6	60 0	140	284
–17 8	0	32 0	3 9	39	102 2	25 6	78	172 4	65 6	150	302
–17 2	1	33 8	4 4	40	104 0	26 1	79	174 2	71 1	160	320
–16 7	2	35 6	5 0	41	105 8	26 7	80	176 0	76 7	170	338
–16 1	3	37 4	5 6	42	107 6	27 2	81	177 8	82 2	180	356
–15 6	4	39 2	6 1	43	109 4	27 8	82	179 6	87 8	10	374
–15 0	5	41 0	6 7	44	111 2	28 3	83	181 4	93 3	200	392
–14 4	6	42 8	7 2	45	113 0	28 9	84	183 2	98 9	210	410
–13 9	7	44 6	7 8	46	114 8	29 4	85	185 0	104 4	220	428
–13 3	8	46 4	8 3	47	116 6	30 0	86	186 8	110 0	230	446
–12 8	9	48 2	8 9	48	118 4	30 6	87	188 6	115 6	240	464
–12 2	10	50 0	9 4	49	120 2	31 1	88	190 4	121 1	250	482
–11 7	11	51 8	10 0	50	122 0	31 7	89	192 2	148 9	300	572
–11 1	12	53 6	10 6	51	123 8	32 2	90	194 0	176 7	350	662
–10 6	13	55 4	11 1	52	125 6	32 8	91	195 8	204	400	752
–10 0	14	57 2	11 7	53	127 4	33 3	92	197 6	232	450	842
–9 4	15	59 0	12 2	54	129 2	33 9	93	199 4	260	500	932
–8 9	16	60 8	12 8	55	131 0	34 4	94	201 2	288	550	1022
–8 3	17	62 6	13 3	56	132 8	35 0	95	203 0	316	600	1112
–7 8	18	64 4	13 9	57	134 6	35 6	96	204 8	343	650	1202
–7 2	19	66 2	14 4	58	136 4	36 1	97	206 6	371	700	1292
–6 7	20	68 0	15 0	59	138 2	36 7	98	208 4	399	750	1382
–6 1	21	69 8	15 6	60	140 0	37 2	99	210 2	427	800	1472
–5 6	22	71 6	16 1	61	141 8	37 8	100	212 0	454	850	1562
–5 0	23	73 4	16 7	62	143 6	38 3	101	213 8	482	900	1652
–4 4	24	75 2	17 2	63	145 4	38 9	102	215 6	510	950	1742
–3 9	25	77 0	17 8	64	147 2	39 4	103	217 4	538	1000	1832
–3 3	26	78 8	18 3	65	149 0	40 0	104	219 2	593	1100	2012
–2 8	27	80 6	18 9	66	150 8	40 6	105	221 0	649	1200	2192
–2 2	28	82 4	19 4	67	152 6	41 1	106	222 8	704	1300	2372
–1 7	29	84 2	20 0	68	154 4	41 7	107	224 6	760	1400	2552
–1 1	30	86 0	20 6	69	156 2	42 2	108	226 4	816	1500	2732
–0 6	31	87 8	21 1	70	158 0	42 8	109	228 2	871	1600	2912

$$C = \frac{5}{9}(F-32)$$

$$F = 32 + \frac{9}{5}C$$

7. Conversion Table for N-kgf

1 = 0 1019716kgf

1kgf = 9 80665

9 8066	1	0 1020	333 43	34	3 4670	657 05	67	6 8321
19 613	2	0 2039	343 23	35	3 5690	666 85	68	6 9341
29 420	3	0 3059	353 04	36	3 6710	676 66	69	7 0360
39 227	4	0 4079	362 85	37	3 7729	686 47	70	7 1380
49 033	5	0 5099	372 65	38	3 8749	696 27	71	7 2400
58 840	6	0 6118	382 46	39	3 9769	706 08	72	7 3420
68 647	7	0 7138	392 27	40	4 0789	715 89	73	7 4439
78 453	8	0 8158	402 07	41	4 1808	725 69	74	7 5459
88 260	9	0 9177	411 88	42	4 2828	735 50	75	7 6479
98 066	10	1 0197	421 69	43	4 3848	745 31	76	7 7498
107 87	11	1 1217	431 49	44	4 4868	755 11	77	7 8518
117 68	12	1 2237	441 30	45	4 5887	764 92	78	7 9538
127 49	13	1 3256	451 11	46	4 6907	774 73	79	8 0558
137 29	14	1 4276	460 91	47	4 7927	784 53	80	8 1577
147 10	15	1 5296	470 72	48	4 8946	794 34	81	8 2597
156 91	16	1 6315	480 53	49	4 9966	804 15	82	8 3617
166 71	17	1 7335	490 33	50	5 0986	813 95	83	8 4636
176 52	18	1 8355	500 14	51	5 2006	823 76	84	8 5656
186 33	19	1 9375	509 95	52	5 3025	833 57	85	8 6676
196 13	20	2 0394	519 75	53	5 4045	843 37	86	8 7696
205 94	21	2 1414	529 56	54	5 5065	853 18	87	8 8715
215 75	22	2 2434	539 37	55	5 6084	862 99	88	8 9735
225 55	23	2 3453	549 17	56	5 7104	872 79	89	9 0755
235 36		2 4473	558 98		5 8124	882 60		9 1774
245 17		2 5493	568 79		5 9144	892 41		9 2794
254 97		2 6513	578 59		6 0163	902 21		9 3814
264 78		2 7532	588 40		6 1183	912 02		9 4834
274 59		2 8552	598 21		6 2203	921 83		9 5853
284 39		2 9572	608 01		6 3222	931 63		9 6873
294 20		3 0591	617 82		6 4242	941 44		9 7893
304 01		3 1611	627 63		6 5262	951 25		9 8912
313 81		3 2631	637 43		6 6282	961 05		9 9932
323 62		3 3651	647 24		6 7301	970 86		10 095

56.85 0 Td [(9)-157952 -9.71872 (3)9T7N0999 7Td [(8)-10755J -382

8. Viscosity Conversion Table

$1mm^2/s = 1cSt$

,JOFNBUJD (mm²/s)					,JOFNBUJD (mm²/s)	#PJU SUS (4F)D		/0 R (4F)D		
						100 Š	210 Š	50 Š	100 Š	
32 6	32 8	30 8	31 2	1 14	35	163	164	144	147	4 70
36 0	36 3	33 3	33 7	1 22	36	168	170	148	151	4 83
39 1	39 4	35 9	36 5	1 31	37	172	173	153	155	4 96
42 3	42 6	38 5	39 1	1 40	38	177	178	156	159	5 08
45 5	45 8	41 1	41 7	1 48	39	181	183	160	164	5 21
48 7	49 0	43 7	44 3	1 56	40	186	187	164	168	5 34
52 0	52 4	46 3	47 0	1 65	41	190	192	168	172	5 47
55 4	55 8	49 1	50 0	1 75	42	195	196	172	176	5 59
58 8	59 2	52 1	52 9	1 84	43	199	201	176	180	5 72
62 3	62 7	55 1	56 0	1 93	44	204	205	180	185	5 85
65 9	66 4	58 2	59 1	2 02	45	208	210	184	189	5 98
69 6	70 1	61 4	62 3	2 12	46	213	215	188	193	6 11
73 4	73 9	64 7	65 6	2 22	47	218	219	193	197	6 24
77 2	77 7	68 0	69 1	2 32	48	222	224	197	202	6 37
81 1	81 7	71 5	72 6	2 43	49	227	228	201	206	6 50
85 1	85 7	75 0	76 1	2 54	50	231	233	205	210	6 63
89 2	89 8	78 6	79 7	2 64	55	254	256	225	231	7 24
93 3	94 0	82 1	83 6	2 76	60	277	279	245	252	7 90
97 5	98 2	85 8	87 4	2 87	65	300	302	266	273	8 55
102	102	89 5	91 3		70	323	326	286	294	9 29
					75	346	349	306	315	9 89
					80	371	373	326	336	10 5
					85	394	397	347	357	11 2
					90	417	420	367	378	11 8
					95	440	443	387	399	12 5
					100	464	467	408	420	13 2
					120	556	560	490	504	15 8
					140	649	653	571	588	18 4
					160	742	747	653	672	21 1
					180	834	840	734	757	23 7
					200	927	933	816	841	26 3
					250	1 159	1 167	1 020	1 051	32 9
					300	1 391	1 400	1 224	1 241	39 5

69 1 9 29 144 -19 436 T

9. Hardness Conversion Table

3PDLXFMM)BSEOFTT	EJBMFTT)BSEOFTT	4UBOEBSE#BMM)BSEOFTT	4UBOEBSE#BMM)BSEOFTT	3PDLXFMM)BSEOFTT	4IPSF)BSEOFTT
C 4DBMF (150 kgf)				A 4DBMF (60 kgf)	B 4DBMF (100 kgf)	
68	940	-	-	85 6	-	97
67	900	-	-	85 0	-	95
66	865	-	-	84 5	-	92
65	832	-	739	83 9	-	91
64	800	-	722	83 4	-	88
63	772	-	705	82 8	-	87
62	746	-	688	82 3	-	85
61	720	-	670	81 8	-	83
60	697	-	654	81 2	-	81
59	674	-	634	80 7	-	80
58	653	-	615	80 1	-	78
57	633	-	595	79 6	-	76
56	613	-	577	79 0	-	75
55	595	-	560	78 5	-	74
54	577	-	543	78 0	-	72
53	560	-	525	77 4	-	71
52	544	500	512	76 8	-	69
51	528	487	496	76 3	-	68
50	513	475	481	75 9	-	67
49	498	464	469	72 5	-	66
48	484	451	455	74 7	-	64
47	471	442	443	74 1	-	63
46	458	432	432	73 6	-	62
45	446	421	421	73 1	-	60
44	434	409	409	72 5	-	58
43	423	400	400	72 0	-	57
42	412	390	390	71 5	-	56
41	402	381	381	70 9	-	55
40	392	371	371	70 4	-	54
39	382	362	362	69 9	-	52
38	372	353	353	69 4	-	51
37	363	344	344	68 9	-	50
36	354	336	336	68 4	(109 0)	49
35	345	327	327	67 9	(108 5)	48
34	336	319	319	67 4	(108 0)	47
33	327	311	311	66 8	(107 5)	46
32	318	301	301	66 3	(107 0)	44
31	310	294	294	65 8	(106 0)	43
30	302	286	286	65 3	(105 5)	42
29	294	279	279	64 7	(104 5)	41
28	286	271	271	64 3	(104 0)	41
27	279	264	264	63 8	(103 0)	40
26	272	258	258	63 3	(102 5)	38
25	266	253	253	62 8	(101 5)	38
24	260	247	247	62 4	(101 0)	37
23	254	243	243	62 0	100 0	36
22	248	237	237	61 5	99 0	35
21	243	231	231	61 0	98 5	35
20	238	226	226	60 5	97 8	34
(18)	230	219	219	-	96 7	33
(16)	222	212	212	-	95 5	32
(14)	213	203	203	-	93 9	31
(12)	204	194	194	-	92 3	29
(10)	196	187	187	-	90 7	28
(8)	188	179	179	-	89 5	27
(6)	180	171	171	-	87 1	26
(4)	173	165	165	-	85 5	25
(2)	166	158	158	-	83 5	24
(0)	160	152	152	-	81 7	24

Appendix
10. Tolerances for Shafts

Nominal Shaft Diameter(mm)		Bearings	d6	e6	f6	g5	g6	h5	h6	h7	h8	h9	h10	js5	js6
0 W F S	5 P Δ_{dmp})														
3	6	0 –8	–30 –38	–20 –28	–10 –18	–4 –9	–4 –12	0 –5	0 –8	0 –12	0 –18	0 –30	0 –48	,2 5	,4
6	10	0 –8	–40 –49	–25 –34	–13 –22	–5 –11	–5 –14	0 –6	0 –9	0 –15	0 –22	0 –36	0 –58	,3	,4 5
10	18	0 –8	–50 –61	–32 –43	–16 –27	–6 –14	–6 –17	0 –8	0 –11	0 –18	0 –27	0 –43	0 –70	,4	,5 5
18	30	0 –10	–65 –78	–40 –53	–20 –33	–7 –16	–7 –20	0 –9	0 –13	0 –21	0 –33	0 –52	0 –84	,4 5	,6 5
30	50	0 –12	–80 –96	–50 –66	–25 –41	–9 –20	–9 –25	0 –11	0 –16	0 –25	0 –39	0 –62	0 –100	,5 5	,8
50	80	0 –15	–100 –119	–60 –79	–30 –49	–10 –23	–10 –29	0 –13	0 –19	0 –30	0 –46	0 –74	0 –120	,6 5	,9 5
80	120	0 –20	–120 –142	–72 –94	–36 –58	–12 –27	–12 –34	0 –15	0 –22	0 –35	0 –54	0 –87	0 –140	,7 5	,11
120	180	0 –25	–145 –170	–85 –110	–43 –68	–14 –32	–14 –39	0 –18	0 –25	0 –40	0 –63	0 –100	0 –160	,9	,12 5
180	250	0 –30	–170 –199	–100 –129	–50 –79	–15 –35	–15 –44	0 –20	0 –29	0 –46	0 –72	0 –115	0 –185	,10	,14 5
250	315	0 –35	–190 –222	–110 –142	–56 –88	–17 –40	–17 –49	0 –23	0 –32	0 –52	0 –81	0 –130	0 –210	,11 5	,16
315	400	0 –40	–210 –246	–125 –161	–62 –98	–18 –43	–18 –54	0 –25	0 –36	0 –57	0 –89	0 –140	0 –230	,12 5	,18
400	500	0 –45	–230 –270	–135 –175	–68 –108	–20 –47	–20 –60	0 –27	0 –40	0 –63	0 –97	0 –155	0 –250	,13 5	,20
500	630	0 –50	–260 –304	–145 –189	–76 –120	-	–22 –66	-	0 –44	0 –70	0 –110	0 –175	0 –280	-	,22
630	800	0 –75	–290 –340	–160 –210	–80 –130	-	–24 –74	-	0 –50	0 –80	0 –125	0 –200	0 –320	-	,25
800	1 000	0 –100	–320 –376	–170 –226	–86 –142	-	–26 –82	-	0 –56	0 –90	0 –140	0 –230	0 –360	-	,28
1 000	1 250	0 –125	–350 –416	–195 –261	–98 –164	-	–28 –94	-	0 –66	0 –105	0 –165	0 –260	0 –420	-	,33
1 250	1 600	0 –160	–390 –468	–220 –298	–110 –188	-	–30 –108	-	0 –78	0 –125	0 –195	0 –310	0 –500	-	,39
1 600	2 000	0 –200	–430 –522	–240 –332	–120 –212	-	–32 –124	-	0 –92	0 –150	0 –230	0 –370	0 –600	-	,46

1): Average outer diameter tolerances on the plane(Tolerance Class O)

+3	+6	+8	+6	+9	+13	+9	+12	+16	+20	+23	+27
–2	–2	–4	+1	+1	+1	+4	+4	+8	+12	+15	+15
+4	+7	+10	+7	+10	+16	+12	+15	+19	+24	+28	+34
–2	–2	–5	+1	+1	+1	+6	+6	+10	+15	+19	+19
+5	+8	+12	+9	+12	+19	+15	+18	+23	+29	+34	+41
–3	–3	–6	+1	+1	+1	+7	+7	+12	+18	+23	+23
+5	+9	+13	+11	+15	+23	+17	+21	+28	+35	+41	+49
–4	–4	–8	+2	+2	+2	+8	+8	+15	+22	+28	+28
+6	+11	+15	+13	+18	+27	+20	+25	+33	+42	+50	+59
–5	–5	–10	+2	+2	+2	+9	+9	+17	+26	+34	+34
										+60	+71
+6	+12	+18	+15	+21	+32	+24	+30	+39	+51	+41	+41
–7	–7	–12	+2	+2	+2	+11	+11	+20	+32	+62	+73
										+43	+43
										+73	+86
+6	+13	+20	+18	+25	+38	+28	+35	+45	+59	+51	+51
–9	–9	–15	+3	+3	+3	+13	+13	+23	+37	+76	+89
										+54	+54
										+88	+103
										+63	+63
+7	+14	+22	+21	+28	+43	+33	+40	+52	+68	+90	+105
–11	–11	–18	+3	+3	+3	+15	+15	+27	+43	+65	+65
										+93	+108
										+68	+68
										+106	+123
										+77	+77
+7	+16	+25	+24	+33	+50	+37	+46	+60	+79	+109	+126
–13	–13	–21	+4	+4	+4	+17	+17	+31	+50	+80	+80

11. Tolerances for Housing Holes

			E6	F6	F7	G6	G7	H6	H7	H8	J6	J7	JS6	JS7
10	18	0 −8	+43 +32	+27 +16	+34 +16	+17 +6	+24 +6	+11 0	+18 0	+27 0	+6 −5	+10 −8	,55	,9
18	30	0 −9	+53 +40	+33 +20	+41 +20	+20 +7	+28 +7	+13 0	+21 0	+33 0	+8 −5	+12 −9	,65	,10
30	50	0 −11	+66 +50	+41 +25	+50 +25	+25 +9	+34 +9	+16 0	+25 0	+39 0	+10 −6	+14 −11	,8	,12
50	80	0 −13	+79 +60	+49 +30	+60 +30	+29 +10	+40 +10	+19 0	+30 0	+46 0	+13 −6	+18 −12	,95	,15
80	120	0 −15	+94 +72	+58 +36	+71 +36	+34 +12	+47 +12	+22 0	+35 0	+54 0	+16 −6	+22 −13	,11	,17
180	250	0 −30	+129 +100	+79 +50	+96 +50	+44 +15	+61 +15	+29 0	+46 0	+72 0	+22 −7	+30 −16	,145	,23
250	315	0 −35	+142 +110	+88 +56	+108 +56	+49 +17	+69 +17	+32 0	+52 0	+81 0	+25 −7	+36 −16	,16	,26
315	400	0 −40	+161 +125	+98 +62	+119 +62	+54 +18	+75 +18	+36 0	+57 0	+89 0	+29 −7	+39 −18	,18	,28
400	500	0 −45	+175 +135	+108 +68	+131 +68	+60 +20	+83 +20	+40 0	+63 0	+97 0	+33 −7	+43 −20	,20	,31
500	630	0 −50	+189 +145	+120 +76	+146 +76	+66 +22	+92 +22	+44 0	+70 0	+110 0	-	-	,22	,35
630	800	0 −75	+210 +160	+130 +80	+160 +80	+74 +24	+104 +24	+50 0	+80 0	+125 0	-	-	,25	,40
800	1000	0 −100	+226 +170	+142 +86	+176 +86	+82 +26	+116 +26	+56 0	+90 0	+140 0	-	-	,28	,45
1000	1250	0 −125	+261 +195	+164 +98	+203 +98	+94 +28	+133 +28	+66 0	+105 0	+165 0	-	-	,33	,52
1250	1600	0 −160	+298 +220	+188 +110	+235 +110	+108 +30	+155 +30	+78 0	+125 0	+195 0	-	-	,39	,62
1600	2000	0 −200	+332 +240	+212 +120	+270 +120	+124 +32	+182 +32	+92 0	+150 0	+230 0	-	-	,46	,75
2000	2500	0 −250	+370 +260	+240 +130	+305 +130	+144 +34	+209 +34	+110 0	+175 0	+280 0	-	-	,55	,87

6 O Jµm

K5	K6	K7	5	6	7	5	6	7	P6	P7	Nominal Shaft Diameter(mm) 0 W F S 5 P
+2 –6	+2 –9	+6 –12	–4 –12	–4 –15	0 –18	–9 –17	–9 –20	–5 –23	–15 –26	–11 –29	10 18
+1 –8	+2 –11	+6 –15	–5 –14	–4 –17	0 –21	–12 –21	–11 –24	–7 –28	–18 –31	–14 –35	18 30
+2 –9	+3 –13	+7 –18	–5 –16	–4 –20	0 –25	–13 –24	–12 –28	–8 –33	–21 –37	–17 –42	30 50
+3 –10	+4 –15	+9 –21	–6 –19	–5 –24	0 –30	–15 –28	–14 –33	–9 –39	–26 –45	–21 –51	50 80
+2 –13	+4 –18	+10 –25	–8 –23	–6 –28	0 –35	–18 –33	–16 –38	–10 –45	–30 –52	–24 –59	80 120
+3 –15	+4 –21	+12 –28	–9 –27	–8 –33	0 –40	–21 –39	–20 –45	–12 –52	–36 –61	–28 –68	120 180
+2 –18	+5 –24	+13 –33	–11 –31	–8 –37	0 –46	–25 –45	–22 –51	–14 –60	–41 –70	–33 –79	180 250
+3 –20	+5 –27	+16 –36	–13 –36	–9 –41	0 –52	–27 –50	–25 –57	–14 –66	–47 –79	–36 –88	250 315
+3 –22	+7 –29	+17 –40	–14 –39	–10 –46	0 –57	–30 –55	–26 –62	–16 –73	–51 –87	–41 –98	315 400
+2 –25	+8 –32	+18 –45	–16 –43	–10 –50	0 –63	–33 –60	–27 –67	–17 –80	–55 –95	–45 –108	400 500
-	0 –44	0 –70	-	–26 –70	–26 –96	-	–44 –88	–44 –114	–78 –122	–78 –148	500 630
-	0 –50	0 –80	-	–30 –80	–30 –110	-	–50 –100	–50 –130	–88 –138	–88 –168	630 800
-	0 –56	0 –90	-	–34 –90	–34 –124	-	–56 –112	–56 –146	–100 –156	–100 –190	800 1000
-	0 –66	0 –105	-	–40 –106	–40 –145	-	–66 –132	–66 –171	–120 –186	–120 –225	1000 1250
-	0 –78	0 –125	-	–48 –126	–48 –173	-	–78 –156	–78 –203	–140 –218	–140 –265	1250 1600
-	0 –92	0 –150	-	–58 –150	–58 –208	-	–92 –184	–92 –242	–170 –262	–170 –320	1600 2000
-	0 –110	0 –175	-	–68 –178	–68 –243	-	–110 –220	–110 –285	–195 –305	–195 –370	2000 2500

13. Physical/Mechanical Characteristics of Metals

Material	Specific Gravity	Linear Expansion Coefficient (0~100 •)	Hardness (Brinnel)	Final Modulus ofElasticity(MPa) b kgf/mm^2 d	Tensile Strength(Pa) b kgf/mm^2 d	Yield Point (Pa) b kgf/mm^2 d	Elongation (%)
Bearing Steel(Hardened)	7 83	12 5 ƒ10 ^{6}	650~740	208 000 b21 200 d	1 570~1 960 b 160~200 d		
Martensite Stainless Steel SUS 440C	7 68	10 1 ƒ10 ^{6}	580	200 000 b 20 400 d	1 960 b 200 d	1 860 b 190 d	
Mild Steel (C=0 12~0 20%)	7 86	11 6 ƒ10 ^{6}	100~130	206 000 b 21 000 d	373~471 b 38~48 d	216~294 b22~30 d	24~36
(C=0 12~0 20%)	7 84	11 3 ƒ10 ^{6}	160~200	206 000 b21 000 d	539~686 b 55~70 d	333~451 b34~46 d	14~26
Austenite Stainless Steel SUS 304C	8 03	16 3 ƒ10 ^{6}	150	193 000 b19 700 d	588 b 60 d	245 b25 d	60
Cast Iron — Grey Cast Iron FC 20	7 3	10 4 ƒ10 ^{6}	140~200	98 100 b10 000 d	167~265 b17~27 d		
Cast Iron — Spherulitic graphite cast iron FCD 20	7 0	11 7 ƒ10 ^{6}	Same or below 201		Same or below 302 b40 d		Same or below 12
Aluminium	2 69	23 7 ƒ10 ^{6}	15~26	70 600 b7 200 d	78 b8 d	34 b3 5 d	35
Zinc	7 14	31 ƒ10 ^{6}	30~60	92 200 b9 400 d	147 b15 d		30~40
Copper	8 93	16 2 ƒ10 ^{6}	50	123 000 b12 500 d	196 b 20 d	69 b7 d	15~20
Brass	8 5	19 1 ƒ10 ^{6}	" C P ¥5U	103 000 b10 500 d	294~343 b 30~35 d		65~75
Brass (Hardened)			85~130		363~539 b 37~55 d		15~50

Hardness of both heat-treated steels and martensite stainless steels are generally denoted by using the Rockwell Scale, but in this table, for the sake of comparison, they were converted to Brinnel hardness values.

Seoul Office

Hanwha Bldg. 7, 8th Floor Jangkyo-dong, Jung-ku, Seoul Korea

¥ Domestic Business Dept.

Direct Supply Sales Team
Tel. (02)729-3224~29
Fax.(02)729-3422

Automotive Sales Team
Tel. (02)729-3252~60
Fax.(02)729-3310

¥ Overseas Dept.

Overseas Sales Team 1
Tel. (02)729-3161~71
Fax.(02)729-3419

Overseas Sales Team 2
Tel. (02)729-3182~85
Fax.(02)729-3360/88

¥ Technical Sales Team

Tel. (02729-3241~45, 62~66
Fax.(02)729-3310

Branches

¥ Seoul Branch

Store No. A-5501 Choong-Ang Yu-Tong Sang-Ka Kuro-ku, Seoul
Tel. (02)2619-0673
Fax.(02)2611-6075

¥ Ahnsan Branch

Building A, Store No. 303
Ahnsan Yu-Tong Sang-Ka, Pyun-Ik 994-5 Wonkok-dong, Ahnshan-si, Kyunggi Province
Tel. (031)491-3247
Fax.(031)493-8436

¥ Kwangju Branch

695-9 Jungheug-dong, Puk-ku, Kwangju-si
Tel. (062)523-4417
Fax.(062)523-4903

¥ Daejeon Branch

440-9 Ohjeong-dong, Daeduk-ku, Daejeon
Tel. (042)623-3764
Fax.(042)623-3766

¥ Pusan Branch

577-7 Goebup-dong, Sasang-ku, Pusan
Tel. (051)328-9385
Fax.(051)324-0382

¥ Daeku Branch

2-ka 17-2 Taepyung-ro, Jung-ku, Daeku
Tel. (053)256-4066
Fax.(053)253-5229

¥ Ulsan Branch

1285-11 Dal-dong, Nam-ku, Ulsan Factoris
Tel. (052)260-6980
Fax.(052)276-8343

Factories

¥ Changwon Factory 1

452-9 Nae-dong, Changwon-si, Kyung-Nam Province
Tel. (055)280-8700
Fax.(055)280-8787

¥ Changwon Factory 2

46 Woongnam-dong, Changwon-si, Kyung-Nam Province
Tel. (055)280-8710
Fax.(055)262-1819

¥ Changwon Factory 3

851-5 Oi-dong, Changwon-si, Kyung-Nam Province
Tel. (055)260-8803
Fax.(055)260-8990

¥ Jeonju Factory

3-ka 402 Palbok-dong, Deokjin-ku, Jeonju-si, Jeon-Nam Province
Tel. (063)210-5511
Fax.(063)212-4686

R & D Center

851-5 Oi-dong, Changwon-si, Kyung-Nam Province
Tel. (055)260-8803
Fax.(055)260-8990

Ball Bearing • Roller Bearing • Special Bearing

GB 41 500 EA/06/01